Operating and Installation Instructions.
Users Manual
xeoos 5 kW | 8 kW

V01-2018



Content Page

General Information 3
Operational Description 3
Operational Description 4
Installation of the Stove 4
Space Requirements and Room-Heating-Capacity 4
Connection to the Chimney 4
Distance to the sides and Behind 5
Fire Protection Requirements in the Front 5
Protection of the Floor 5
Installation 5
Initiation 5
Permitted Fuels 5
Conventional Utilization 5
User Groups 6
Start the Fire and Venting 6
Permanent Operation 7
Operation in the Transition Period 7
Shutdown 8
Inappropriate Usage 8
Cleaning and Maintenance 8
Empty Out Ash Pan 8
Cleaning the Pane 8
Clean the Smoke Gas Flues 9
Maintenance Activities 9
Troubleshooting: Causes and Their Repair 9
The Fuel Does not Light 9
The Stove Heats too Slowly 9
The Panes Soot 10
The Wood Consumption is too High 10
Smoke Escapes from the Oven 10
"Snap-Sounds" 10
Xeoos Original-Replacement Parts 10
Technical Data xeoos 5 kW | xeoos 8 kW 11
Accrediation 11
Xeoos® warranty conditions 12

General Information

Thank you very much for choosing the xeoos® [5 kW|8 kW]. The Xeoos® is a TwinFire®-System a remarkable product that uses two fires and is easy to operate.

We have developed this stove with care and are happy to provide you with an exceptionally high-quality and ecological product.

Please read these operating instructions carefully before the first initial use. It contains important and beneficial information for the operation of your stove. If you still have questions or something does not work, please turn to your retailer or contact us directly. The contact address can be found on the last page.

We wish you and your friends many enjoyable and comfortable hours with your xeoos®.

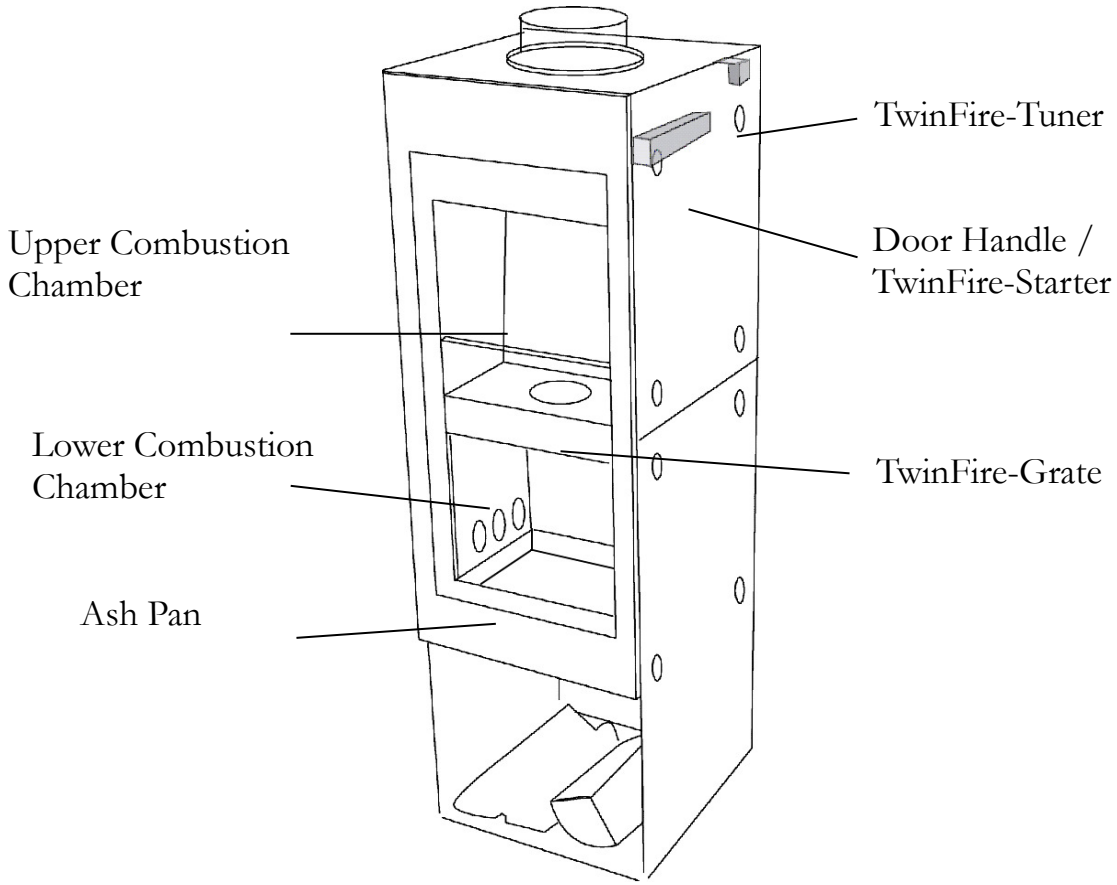

Operational Description

The patented TwinFire®-System of xeoos® is based on the principle of gasification with the use of the furnace. The Xeoos® is accredited after DIN 18891 and EN 13240 for stoves of building class 1 and falls well below the normal required value with its emission.

In the upper combustion chamber it is set according to the desired heating output which controls the primary air feed connected to the first combustion level. In this process energy efficient wood-gas is drawn through the blaze and burned centrally at high temperatures [> 1000° C] under the feeding of secondary air. The two-flame combustion in the upper and lower combustion chamber can be well observed at all times due to the big Robax-glass-ceramics.

Due to the good burnout in the second combustion level the xeoos® reaches a very high degree of efficiency. This means a great heating output at low fuel consumption and with less ash.

Via two control elements the combustion-principle and the heating output can be adjusted optimally.

1. The door handle with double-function makes the locking of the door and the starting of the TwinFire-System possible. The setting "heat up"
   [See Page 8] allows the exhaust gas, like a normal stove, to exhaust directly upwards. The stove is heated up in this setting. The switching into the second setting [TwinFire®] starts the low-emission and efficient operation of the gasification furnace.
2. By shifting the TwinFire-Tuner the heating output is controlled through addition and starvation of primary air in a range of 40 to 100 percent of the nominal output.

Installation of the Stove

Space Requirements and Room-Heating-Capacity

The room-heating-capacity is highly dependent on the room's location and interior as well as on the operation method. In a new building please be prepared to calculate your heat demand. In older buildings a nominal heating capacity of aprox. 5 kW is enough according to DIN 18893

- During less beneficial heating conditions such as outer walls and wind exposure for aprox. 50 m² with 2,5 m ceiling height
  [8 kW: 70 m²]
- During unfavorable heating conditions for aprox. 32 m² with 2,5 m ceiling height
  [8 kW: 51 m²]

For time-heating, which means a break of more than 8 hours, the room-heating-capacity is about aprox. 25 percent lower. Please clarify the space requirements with your retailer and/or installer.

Connection to the Chimney

The xeoos® features according to building class 1, EN 13240 a self-locking door and is licensed for use on building class 1 insulated chimneys.

The xeoos® is assembled and ready for connection upon delivery. It is connected to the chimney with standard flue pipes [standard measurement 150 mm Ø]. The minimum height for the stove connection is determined by the height and position of the stove's flue pipe. Please refer to the table on page 14 concerning this. If you install the stove yourself, you have to follow the planning laws and Building Regulation laws, and the installation has to be signed off by a Building Controll officer. It is recommended that a HETAS approved installer fits this appliance, but your retailer/installer can advise accordingly.

Caution: The installer has to approve the fireplace before the initial operation and issue a certificate about the safe utilization and the correct flue gas evacuation. (HETAS certification)

Ensure that the air quantity which is needed for the combustion can be supplied. This applies especially to close-locking windows and doors. The chimney calculation is carried out according to EN 13384 with the triple-value, which can be taken from the table from page 16 [chimney sweep informtion].

Distance to the Side and Behind

A minimum distance of 20 cm clearance to each side and 10cm behind the unit must be maintained to avoid flamable parts and furniture.

Fire Protection Requirements in the Front

In the band of radiation ensure that no flammable parts or furniture are allowed up to a distance of 40 cm. Due to the radiation of heat from the front of the stove, no flammable materials must be closer than 80cm.

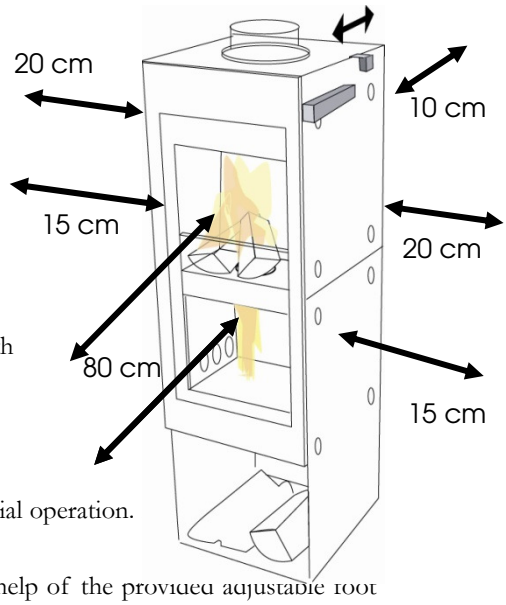

Protection of the Floor

In front of the door inflammable floors need to be protected through a hearth made out of non-combustible material. The hearth needs to stretch out at least 30 cm in the front and at least 15 cm to each side beyond the fire hole.

Installation

The stove has to be checked for transport damage before installation and initial operation. in the factory.

The stove has to be set out on the floor/hearth and set up stable with the help of the provided adjustable foot and respective felt washer.

Caution: The named safety clearances have to be maintained.

The flue pipe is installed into the spigot provided and secured close to the chimney through a wall-liner. The grate is put into the round cut-out in the upper combustion chamber so that the thin X-form points to the user. Before installation this needs to be checked, especially if the strength of the installation location is warranted. Weights can be found on page 14.

Initiation

Before the first initiation all surfaces should be wiped clean with a soft, dry cloth to avoid a baking of the protection film's and/or dust particles. Despite the use of a special odourless lacquer, an odour may develop while the stove first heats up. Because of this, it should be ensured that there is good ventilation while the lacquer's baking.

Permitted Fuels

For heating are exclusively allowed: split logs, and compressed logs, according to DIN 51731. Split logs are only allowed to be used when it is air-dry with 15– 24 % of the initial residual moisture. The burning of any wastage is prohibited according to the federal emission-conservation law; this can also lead to damage of the stove and the chimney.

Info: Air-dry split logs with maximal 24 Percent water is obtained through a minimum of one year drying [softwood] and respectively two years with hardwood.

Caution: Wood has a low endurance as fuel which means heating throughout the entire night is impossible.

Conventional Utilization

The xeoos stove serves the living space's heating exclusively under the usage of the allowed fuels.

User Groups

The xeoos® stove is only allowed to be used and operated by adult people, because the exposure to fire requires increased care.

If there are children, elderly or disabled near the hot stove, ensure that these are supervised and suitable guarding is in place.

Caution: Hot surfaces – Danger of being burnt!

Caution: Flying sparks are possible when opening the door!

Start the Fire and Venting

❶ ❷ ❸ ❹

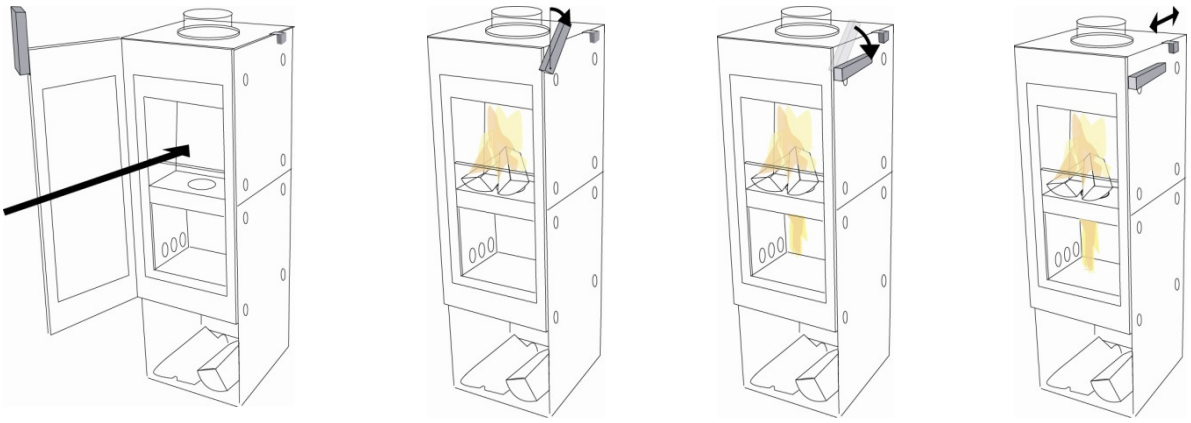

Fill [Upper combustion chamber] | Heat up | Switch to TwinFire | Control of power output

To start the fire a small piece of wood can be used together with a regular lighter and shavings which can be layered in the upper combustion chamber [❶]. For safety reasons fluid fuels are categorically not allowed to be used. To start the fire the control elements have to be put in the following positions [❷]:

- Door handle: "Heat up"
- TwinFire®-Tuner: "100 %"

As soon as the kindling has turned into a flame the permitted fuels can be put into the stove. One should not put more than one to two small pieces [total of aprox. 1 to 1.5 kg for the 5 kW and respectively 1.5 to 2.5 kg for the 8 kW-model] in the upper combustion chamber. Until the necessary basic fire bed is reached the TwinFire®-Starter has to be the in the position "Heat up" [❷]. After approx. 30-45 minutes a blaze should have ignited allowing the switch to be put on the "TwinFire®" position [❸] (Indicator: X-grate glows). The combustion occurs primarily downwards through the blaze. With the TwinFire®-Tuner [❹] the output can be regulated now as necessary.

Caution: The TwinFire®-System achieves its optimal effect only when the xeoos® is already burning for 30-45 minutes and there is enough basic fire bed with a temperature of aprox. 1.000 °C available. Otherwise there is a danger of smoke development and smouldering. If a continuing flame development in the lower combustion chamber is not taking place yet, put the TwinFire®-Starter in the position "Heat up" [❷].

Permanent Operation

In the case of permanent operation new fuel should be put on the fire when the flames in the upper combustion chamber are extinct and there is still enough blaze available. Before opening the door a damper flap in the smoke tube should be opened. Opening the door slowly will prevent the falling out of ashes and blaze. When opening the door the integrated door handle/TwinFire®-Starter prevents the build up of exxessive smoke into the living space. The first 45° of the movement of the handle will turn the stove into the heating up mode. If you move the handle another 45° into the vertical position the door unlocks.

Handle functions:

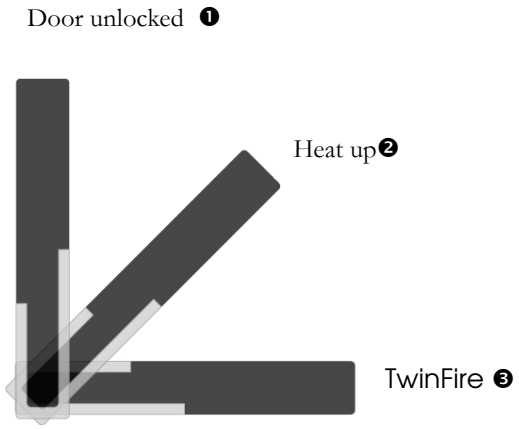

Please open the stove-door with caution, this supports the stable flow for conditions and avoids disruptive turbulence in the fire chamber. After loading the TwinFire®-Starter with enough blaze it must be put into the position of "TwinFire".

Caution: If the xeoos® is operated continually at a high output rate in the position of "heat up" the danger of overheating exists. The handle setting serves, as the name states it, exclusively the heating up.

If the fire has burned down too far in the meantime put more fuel on the fire and leave the handle in the position of "Heat up" until more of a blaze develops. If the chimney is still warm it normally only takes a few minutes.

The stove's output is exclusively regulated through the TwinFire®-Tuner; forward tilting of the heating output can be reduced as necessary. Please only use an additional flue stabiliser or damper in the flue pipe with a high chimney draught.

The stove's heating output is mainly determined by the amount of burned wood. The more wood that is put in the furnace the greater the danger of the stove overheating [especially if the wood is split in small pieces]. Furthermore the air supply is not enough for a total combustion. The consequences of overheating are unnecessary emission and fogging of the glass.

Caution: The nominal heat capacity of 5 kW is reached through aprox. 1 kg wood or 1.2 kg compressed logs. According to DIN 51 731 [8 kW: aprox. 2.4 kg wood or 2 kg compressed logs per hour. Do not put more than 2 kg wood [3 kg in the 8 kW-models] or one or two pieces at once into the combustion chamber. The combustion is optimal when the lower flame is glowing light-yellow to blue. If the flames strike into the flue on the side the allowed heating output is exceeded. The consequence is unnessesary emisions. Reduce the output as normal and put fewer or bigger pieces on.

Operation in the Transition Period

In the transition period when relativity is high outside temperature interferences can cause the chimney to stall. The effect of this is that the smoke gases don't evacuate up the chimney. During this time the stove should not be reduced to the smallest setting of the TwinFire®-Tuner, the heating up will take longer. Please put small wood

on until the chimney is well heated. This can take one to two hours with older built chimneys. The combustion is optimal when the flames glow light-yellow to blue. If the flames strike into the flue on the sides the allowed heating output is exceeded. The consequence is the unnecessary reduction of emissions so lower the output to normal and put fewer or bigger pieces on.

Caution: Open the door only for short periods of time.

Shutdown

Let the fire extinguish and leave the stove closed until it has cooled down. After prolonged periods of shut down, please ensure, that the whole way for the exhaust gases form the wood-stove up to the chimney is free of dirt, birds nest or something else.

Inappropriate Usage

The xeoos® stove is not allowed to be lit with: garbage, plastic, lacquer -leftovers, paper, sawdust, pellets, soft-woods and oils.

The xeoos® stove is not suitable for cooking food.

Ensure that the fresh-air supply has not been cut off.

During room-air operation the opening under the stove has to be free at all times.

During operation with external air supply ensure that the air supply is always free.

The stove may not be opened with any tools or pokers.

The ash pan needs to be emptied when the ash reaches the upper limitation of the ash pan.

No adjustments to the stove are permitted; otherwise the license and the guarantee expire.

To replace broken or damaged parts purchases through your retailer or the manufacturer can be made. The contact information can be found on the backside of the instructions.

Important: Overloading of the xeoos® stove that exceeds the specified values of the value triple will result in the expiry of the guarantee. The observance of the values of the value triple is to be ensured by obtaining a written release of the fireplace with the competent district chimney sweep master..

Cleaning and Maintenance

A cleaning of the xeoos® is only seldom necessary. Efficient combustion and optimized air through ducts can ensure the up keeping of your product. Ensure that cleaning and maintenance has been done correctly and be sure to inspect your fire chamber. The ash pan needs the most maintenance by means of empting it out regularly.

Empty Out Ash Pan

To remove the ash:

- Let stove cool down
- Open combustion chamber door
- Pull out ash pan

Cleaning the Pane

Although the xeoos® needs to be tended to regularly soot is the primary factor that needs to be cleaned. The construction of the fire chamber glass makes it necessary to be cleaned after long usage or improper fuel is burnt.

Tip: A wet cloth with ash cleans soot off glass excellently. Alternatively, you can purchase a special glass-cleaner in stores. No abrasive cleaner to be used.

Clean the Smoke Gas Flues

The basic cleaning and servicing which needs to be done every year depends on the intensity of the usage, but it is only allowed to be carried out by an authorized specialist retailer. For this the insulating plates [vermiculite-plates] have to be removed. You can easily do the cleaning of the supply air openings in the upper combustion chamber and the smoke gas openings in the lower combustion chamber yourself with a vacuum cleaner from time to time. IMPORTANT: Please also vacuum the port in the double bottom!

Clean also the TwinFire grate by knocking off slag remainders.

Notice: Caution when taking out the insulating plates – risk of breakage!

Chimney should be swept annually by a qualified Chimney Sweep

Maintenance Activities

Door-hinges and locks need occasional care. As necessary brass bearing of the door handle can be greased with heat-resistant graphite or Teflon-grease [specialized trade]. The manufacturer offers both Teflon-spray and graphite-spray for this. The manufacturer also offers spray cans to touch-up scratches in the lacquer.

Troubleshooting: Causes and Their Repair

The Fuel Does not light

The chimney draught is only a result of the temperature-difference between the smoke gases in the chimney and the surroundings. The usable draught on the stove is also influenced by the decrease in pressure of the combustion air's way to the chimney outlet.

a) Temperature difference is too small

- TwinFire®-position of the handle with a cold chimney
  → Please put into position "Heat up".
- TwinFire®-Tuner stands on minimum, chimney is still cold
  → Heat up with open air flap [Tuner on "100 %"].
- Wood is too wet → Use dry wood
- Heating output is permanently too small and respectively thermal loss of the chimney is too high for small heating output with high degree of efficiency →Ensure correct diameter flueway is maintained, and flue is not too large or unlined – flue gases cool down too quickly.

b) Decrease in pressure is too high

Volume flow in chimney too high → Check the chimney is sound, i.e. no leaks, or consult your installer.

- Decrease pressure in the chimney if it is too high →Control dimensioning of the chimney [Installer]
- Decrease pressure in the stove if too high [grate clogged or covered]

  →Jiggle grate with poker and remove debris
- Smoke gas flue clogged → Burn fuel off in the mode heat up with minimum output and clean like described in maintenance instructions after the stove's cooling down.
- Air supply is defective → Secure compartment air supply, if need be control existing air supply pipe.

The Stove heats too slowly

- TwinFire®-Tuner is set too low → Please put into "100 %" position
- Minimum basic firebed put TwinFire®-Starter temporarily into position "Heat up".
- Chimney draught too weak, see, the stove does not operate.
- Wood is too wet → Use dry wood

The Glass Soots Up

- Too little chimney draught → see "The stove does not operate".
- Too much wood put on → let it burn down with medium heating output, do not put more wood on until normal blaze amount is reached.
- Too wet, too old, or too rotten wood → use better wood.

The Wood Consumption is too high

- The wood is chopped up too small
- The chimney draught is too high → Put in flue stabiliser or damper flap → Measurement through area of chimney [consult installer]

Smoke Escapes from the Stove

- Too little chimney draught → see "The stove does not operate".
- Primary-air-opening in the upper combustion chamber clogged [burning in the back wall]→ Burning off fuel in the handle-position "Heat up" with minimum output [Tuner tilt entirely forwards] and clean with a vacuum cleaner after cooling down of the stove [possibly take out backmost vermiculite-plate]. → Please also vacuum the ash which has gathered in the bottom.
- Too much ash in the upper combustion chamber and respectively central grate is clogged or covered → Jiggle free with poker.

"Snap-Sounds"

This effect is normal for stoves. It arises from the expansion of metal pieces. The tensions which occur with the heating up and cooling down between the different warm stove pieces adjust themselves in this process.

Xeoos Original-Replacement Parts

- Vermiculite upper combustion chamber 5 kW | 8 KW
- Vermiculite lower combustion chamber 5 kW nature or pure | 8 kW basic or pure
- ZSB handle x5n light | dark
- ZSB handle x5c
- ZSB handle x5y
- ZSB handle x5p black | green
- Steel-grate glass
- Leak-band diameter 11 spring mounted
- High temperature glue for sealing
- TF-grate
- Teflon –Lubricant
- Lacquer-spray can 100ml anthracite | Silber | gush gray | bronze
- Stone pattern | with hole | without hole conversion kit for upper outlet →back outlet
- Conversion kit for back outlet→ upper outlet

Technical Data xeoos 5 kW | xeoos 8 kW

Nominal heat capacity	5 kW	8 kW
Heating output	2-6 kW	3-9 kW
Weight in kg	150 [nature] - 230 [classic]	162 [basic] – 272 [classic]
Chimney sweeper information	EN 13240 building type 1a	EN 13240 building type 1a
Mass flow in g/s	7,4	7,3
Temperature in °C	210	260
Delivery pressure in Pa	12	12
Emission values		
CO g/m³	0,625	0,625
Particulate matter g/m³	0,02	0,022

Accrediation

Accredited after Stuttgart's, Munich's, Regensburg's order as well as article 15 a – BVG each case in the valid version of 01.01.2007.

xeoos® warranty conditions

Dear Customer,

You have chosen the two fire fascination of the Xeoos® and therefore have purchased a product which is built to the highest quality standards. Therefore we issue a guarantee for all stoves for 8 years from date of delivery.

The guarantee applies to the corpus

- Error-free function and proper material
- An error-free construction.

If a quality problem with the xeoos® appears please contact your xeoos® specialist or retailer, who are upholding the guarantee. Approval of your warranty claim will immediately be confirmed with the company Specht. Please send the subsequent form for this. The guarantee-time starts with invoicing to the endcustomer. This is only warrant for unused xeoos® woodstoves.

Warranty- Requirements

Your warranty claim cannot be authenticated or does not apply, if

- The xeoos® was not used according to the associated operation instructions
- Damages appear due to false or improper installation
- Installations or repairs were carried out by a third party
- damages due to normal wear and tear [e.g. seals, glass-ceramics, vermiculite-plates]
- Damage through the use of fuels which are not mentioned in the operating instruction.
- No liability for consequential harms caused by a defect in the product except for intent, gross negligence, violation of basic contractual obligation by the manufacturer and distributor, injury of body and life.
- For these warranty-requirements the salvatorian clause is valid and we refer to our general terms and conditions.

Optical and technical changes to be reserved.

Revisions-Index: 01/2018

xeoos® TWINFIRE

xeoos GmbH
Bahnhofstraße 2
35116 Hatzfeld-Reddighausen

Please Send Back

Please fill out this form and send
it back to xeoos GmbH in the next 14 days, to assure your warranty claim.

Name of the xeoos: _____

Delivery Date: _____

Name and Location of the Retailer:

_____

Stove Number: _____

How did you become aware of the xeoos® stove?

- ☐ Friends and acquaintances
- ☐ Specialty stores
- ☐ Printed materials
- ☐ Internet
- ☐ Presence on a fair

bitte hier falzen



xeoos GmbH
Bahnhofstraße 2
35116 Hatzfeld-Reddighausen
Telefon +49 6452 92988-0
info@xeoos.de
www.xeoos.de