Machine Translated by Google

Operating and installation instructions V.01

Series xeoos x8 8 kW

in conjunction with xeoos x8…E-Fire/xeoos x8… Blue

Types: x8 BASIC…/x8 BASIC ECO GREEN…/x8 PUR…/x8 NATUR…/x8 PATAGONIA…(E-Fire/Blu



Machine Translated by Google

Contents

Contents 2
General information 4
Functional description 5
Setting up the stove 5
Spatial requirements, room heating capacity 5
Connection to the chimney 6
Distances to the side and rear 6
Fire protection to the front 7
Protecting the floor 7
Assembly 7
Commissioning 7
Permissible fuels 8
Intended use 9
User groups 9
Separator (from 2024 for all Blue models) 9
Lighting and filling 10
Preparing to light the fire: 12
Cheering: 12
Initial commissioning of control system: 13
Refilling 15
Status messages: 17
LED signals: 17
Operation in the transition period 18
Decommissioning 18
Improper use 18
Cleaning and maintenance 20
Emptying the ash box 20
Cleaning windows 20
Cleaning flue gas ducts and exhaust pipes 20
Maintenance work 21
Cleaning the catalyst (only for the Blue/E-Fire variant) 21
Malfunctions: Causes and their solutions 24
The stove does not draw 24
Temperature difference too small 24
Pressure losses too high 24

Machine Translated by Google

The stove does not heat well enough 24

The windows become sooty 25

Wood consumption is too high 25

Smoke comes out of the oven 25

“Cracking noises”..... 25

Xeoos original spare parts 25

Approval 26

Fire protection regulations 26

xeoos® Warranty Conditions 26

Warranty requirements 27

Technical data of the fireplace, summary 28

Recycling strategy 29

Machine Translated by Google

General information

Thank you for choosing a xeoos® [8 kW]. The xeoos® with the TwinFire® system is an exceptional product that impresses with two fires and is very easy to operate. The xeoos® is a time-burning fireplace.

We have carefully developed this stove and are pleased to offer you a particularly high quality high-quality and ecological product that meets the requirements of the quality seal of the Blue Angel for fireplace stoves.

Please read this manual carefully before using the device for the first time. It contains important and useful tips for operating your stove. If you still have questions or something does not work, please contact your dealer or contact us directly. You will find the contact address on the last page.

We wish you and your friends many pleasant and cozy hours with your xeoos® .

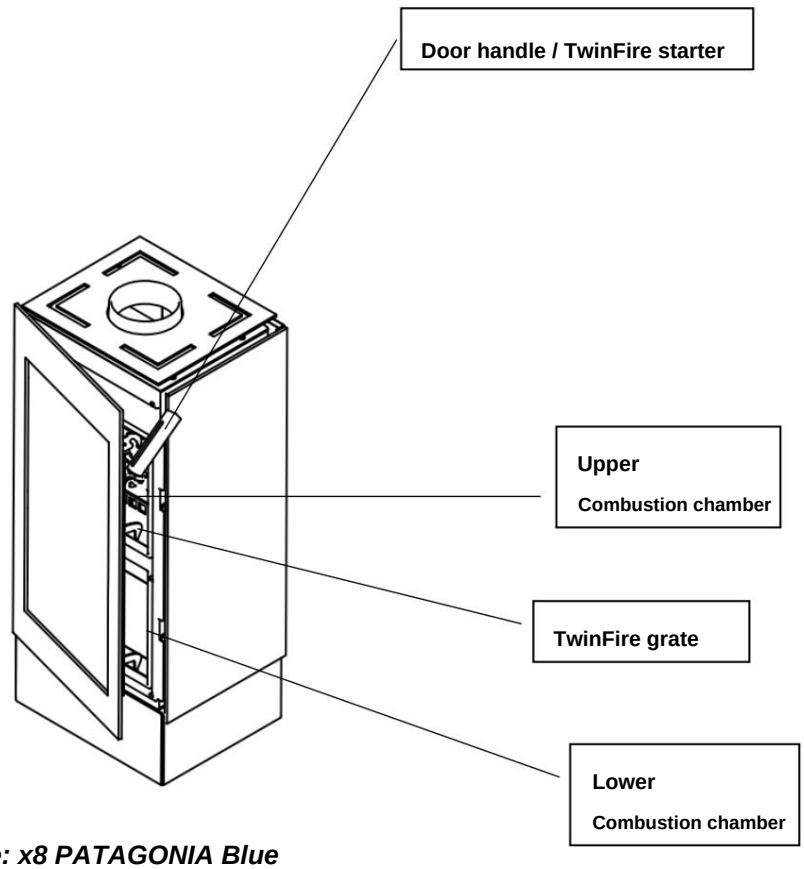

Image: x8 PATAGONIA Blue

Machine Translated by Google

Functional description The

patented TwinFire® system of the xeoos® is based on the principle of a gasification combustion. xeoos® is approved according to DIN 18891 and EN 13240 or DIN EN 16510 for stoves of type 1 and its emissions remain well below the values required by the standard.

In the upper combustion chamber, primary air is supplied to the first combustion stage according to the The resulting energy-rich wood gas is fed into the Embers drawn and centrally with the supply of secondary air at high temperatures [> 1150° C] The two-flame combustion in the upper and lower combustion chamber is due to the large Robax glass ceramic panel can be easily observed at any time.

Due to the good burnout in the second combustion stage, the xeoos® achieves a very high efficiency, which means a high heating output with low fuel consumption and low ash.

The combustion principle and heating output can be optimally adjusted using two control elements.

1. **In contrast to the manually operated xeoos® stoves,** the door handle offers the user **only the possibility to fill the firebox with wood and add more. The former Double function or starting the TwinFire system has been automated and therefore no longer necessary. To close the oven door, use the door handle as described** on page 9 **closed.**

Setting up the stove

Spatial requirements, room heating capacity

The room heating capacity depends heavily on the location and equipment of the room as well as on the mode of operation. For new buildings, please refer to your Heat requirement calculation.

- **ÿ in less favourable heating conditions regarding external walls and wind exposure for approx. 70 m² at 2.5 m room height**
- **ÿ under unfavourable heating conditions for approx. 51 m² at 2.5 m room height [**

For time heating, ie interruption of more than 8 hours, the room heating capacity is about 25 percent lower. Please clarify the spatial requirements with your chimney sweep.

Machine Translated by Google

Connection to the chimney

The xeoos® is designed according to type 1, DIN EN 13240 or DIN EN 16510 with a self-closing door and is also approved for chimneys occupied by multiple type 1 stoves.
Multiple design is only possible in conjunction with room air-independent operation.

The xeoos® is delivered ready for connection. It is supplied with standard
Smoke pipes (standard size 150 mm Ø) are connected to the chimney. The minimum height for
The chimney connection depends on the height and position of the smoke pipe socket on the stove.
If you install the stove yourself, the building regulations and
to comply with fire safety and insurance regulations.
Your chimney sweep. We recommend a chimney calculation according to EN 13384 to be carried out.

It must be ensured that the amount of air required for combustion can be supplied.
This is especially true for tightly closing windows and doors. The chimney calculation
is carried out according to EN 13384 with the triple value that you can find in the table on page 16 [Chimney sweep information] can be found here.

Important: The chimney sweep must inspect the fireplace before commissioning and Certificate of safe use and proper exhaust gas discharge exhibit.

Distances to the side and rear

To combustible components and furniture, a
Minimum distance of 30 cm to the rear
at least 25 cm. To non-combustible materials
no distance is necessary.
For corner installations (device 45° in corner) then a distance of 25cm is required.

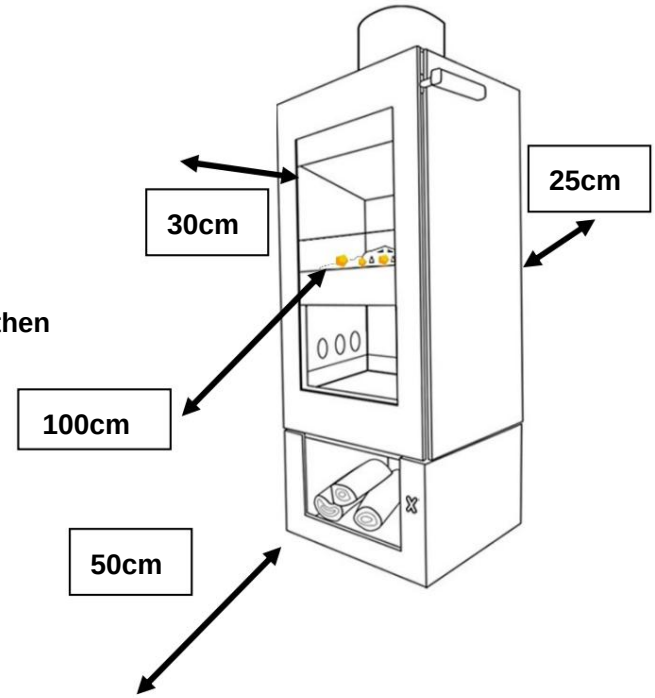

Image: x8 BASIC Blue

Machine Translated by Google

Fire protection forward

In the radiation area, up to
Distance of at least 100 cm no flammable
components or furniture.

Protecting the floor

In front of the doors, flammable floors are
a protective covering made of non-combustible material
The covering must be positioned forwards on
at least 50 cm and at least 30 cm at the sides
extend over the combustion openings.

Assembly

Before installation and commissioning, the oven must be checked for transport damage.
Each oven is tested at the factory.
The stove must be secured to the floor using the supplied adjustable feet or felt discs.
leveled and placed stably.

Important: The specified safety distances must be observed.

The smoke pipe is pushed completely over the nozzle on the stove and through a wall lining
tightly attached to the chimney. The fire grate is fitted into the round cut-out in the
upper combustion chamber so that the curve (curvature) points upwards. Before assembly,
to check whether the load-bearing capacity of the installation site is guaranteed. Weights can be found on
www.xeoos.de and in this manual in the Technical Data chapter.

Commissioning

Before first use, all surfaces should be cleaned with a soft, dry cloth
wiped to avoid burning in of residues of the protective film. Despite the
Using a special low-odor varnish, it can cause
Therefore, when baking the paint, ensure good ventilation

Machine Translated by Google

be taken care of.

Please note that all xeoos® ovens are equipped with a very heat-resistant paint whose layer thickness must be maintained very precisely so that the paint thermal expansion. For this reason, the paint layer, according to the Manufacturer's specifications are relatively thin. If you need to apply a regular coat of paint to painted surfaces, If you perform a scraping movement, the paint layer will wear off and the steel sheet will come to light.

Avoid scratches on the paint!

To start up, please insert 4 AA 1.5 V batteries (alkaline) into the electronic control and connect with a micro USB cable and appropriate 5V USB adapter.
After inserting the batteries or connecting to the power supply, the LED lights up The display shows red, green and orange in sequence. The oven is then ready for use.
When batteries are inserted and connected to the power supply at the same time, the batteries take over automatically stops operation in the event of a power failure. The batteries should be checked regularly to avoid leakage and thus damage to the control unit.

Permitted fuels

The following may only be used for heating: logs, wood briquettes or wood pellets.
Firewood (see below) may only be air-dried with 15 – 24 % wood moisture (13-19% water content)
The burning of any waste and unsuitable, non-recommended
Fuel is prohibited under the Federal Immission Control Act; this can also cause damage to the fireplace and chimney. We expressly point out that it is prohibited
Burning wood with nails or metal residues. In this case, the warranty we have promised will expire Guarantee. The use of softwoods as logs should be avoided due to the low calorific value and high ash production. The use of softwoods can lead to increased wear of the vermiculite or refractory concrete lining. It is It is forbidden to use flammable liquids!

Info: Air-dried logs with a maximum of 24 percent water are dried by a minimum

One year of drying is achieved [softwood] or two years for hardwood.

Important: Wood is not a long-burning fuel, which means that heating it overnight is not possible with wood.

Permissible fuel: Firewood: DIN EN ISO 17225-5:2021-11, wood briquettes DIN ISO 17225-3:2021-06

Machine Translated by Google

Intended Use

The xeoos® stove is used to heat the living space using only

of the permitted fuels wood, wood briquettes and wood pellets. Operating the

The use of brown or hard coal in a fireplace is not permitted.

User groups

The xeoos® stove may only be used or operated by adults

as handling fire requires increased care.

If children are near the hot oven, make sure that they

be supervised.

Caution: Hot surfaces – risk of burns!

Attention: Possible sparks when opening the door!

Separator (from 2024 for all Blue models)

From 2024, the Blue Angel will only be valid in conjunction with the downstream

Separation technology. The xeoos is compatible with the separators from Exodraft systems GmbH

(www.exodraft-systems.de) and/or OekoSolve AG (www.oekosolve.com) and

The operating and installation instructions for the separators are included with the furnace and

can be viewed on the Internet on the manufacturer's website (see above).

Machine Translated by Google

Lighting and filling

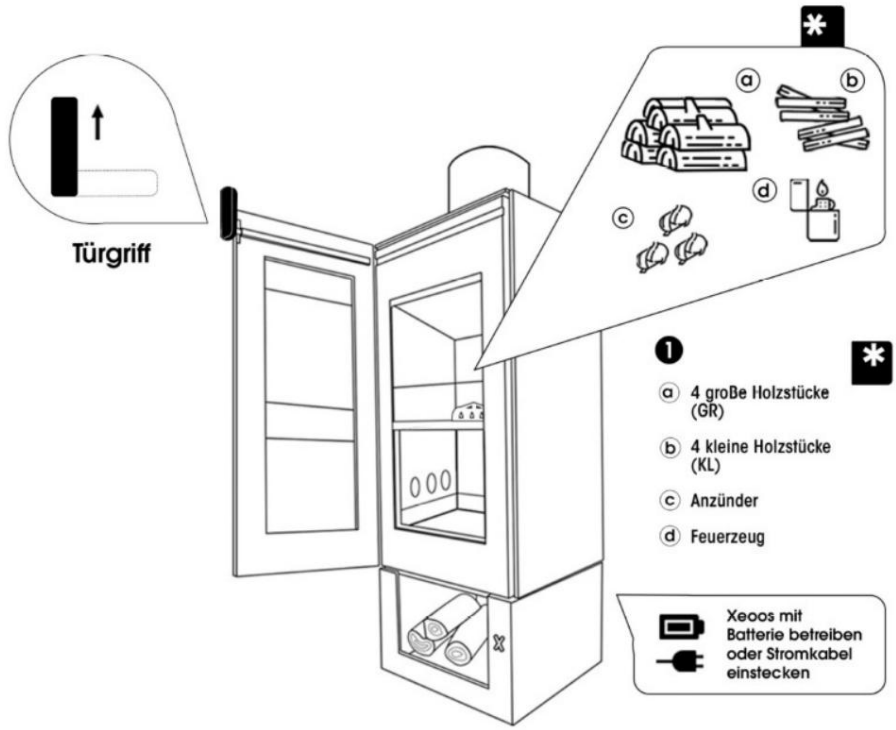

Preparation and filling

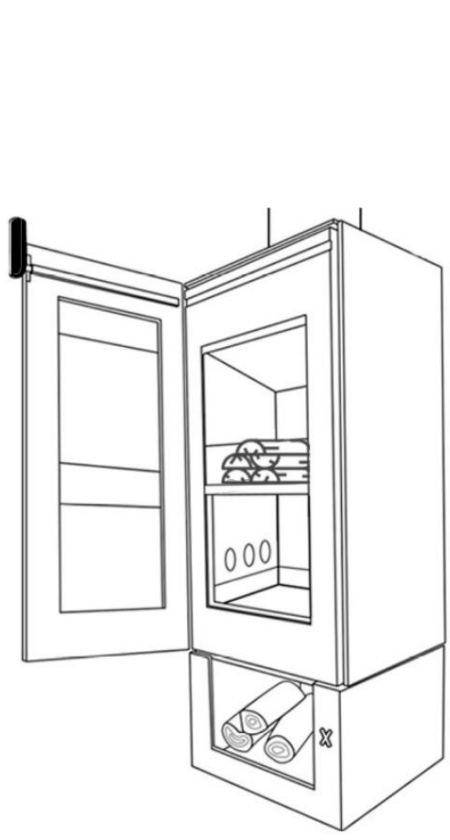

Fire up/heat up

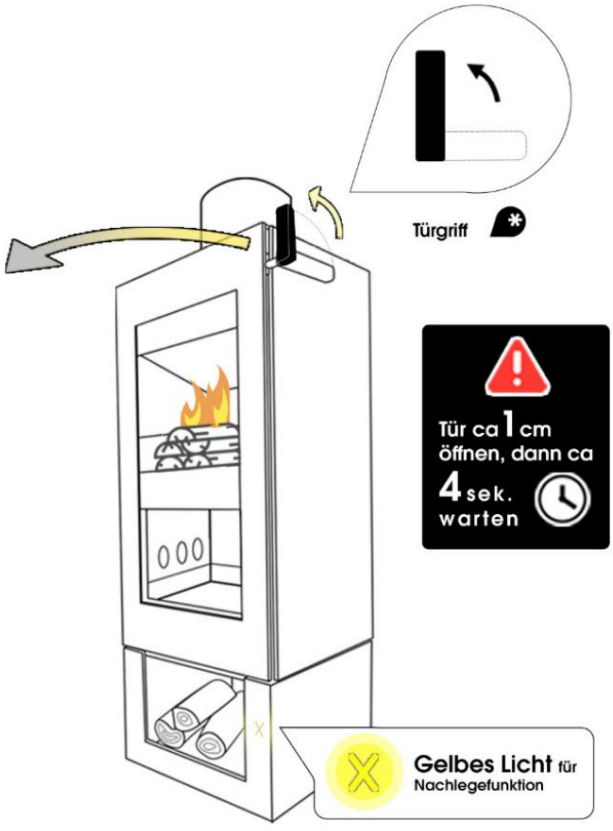

TwinFire Automatic

Machine Translated by Google

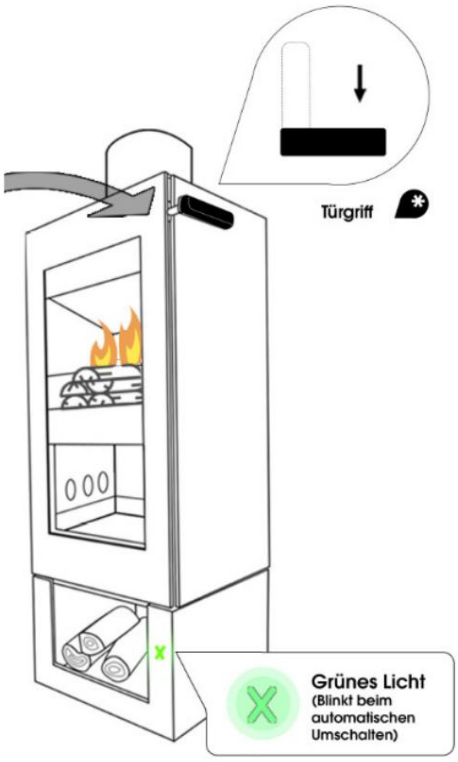

Refill

Please refer to the Quick User Guide

Machine Translated by Google

Preparation for lighting:

Please prepare the materials listed above. The fired goods will only be

placed in the upper combustion chamber. The door can be opened when the handle is parallel to the door.

Please clean the upper combustion chamber of any ash residue from the last combustion process.

The glass panes can be easily cleaned with glass cleaner and a cloth. The TF Rost

must be clean, the holes must be freely permeable. It is best to sweep the ash through the hole in

the lower combustion chamber into the ash box. Only empty the ash box when it is full

Only dispose of cold ash according to regulations.

Caution: The oven must be cold.

Note: The combustion chamber of the fireplace is, with the exception of the loading always keep it closed to avoid heating gas leakage!

Note: Ventilation systems operated together with fireplaces in the same room or room air network can cause problems cause

Cheer on:

Please open the door (see: Preparation for burning)

Please only place the fuel in the upper combustion chamber. This must be clean and free of old free of residues and should not exceed 1.8 kg.

Please place the fuel and the lighting aids as shown in the picture series (phases 1-5).

Machine Translated by Google

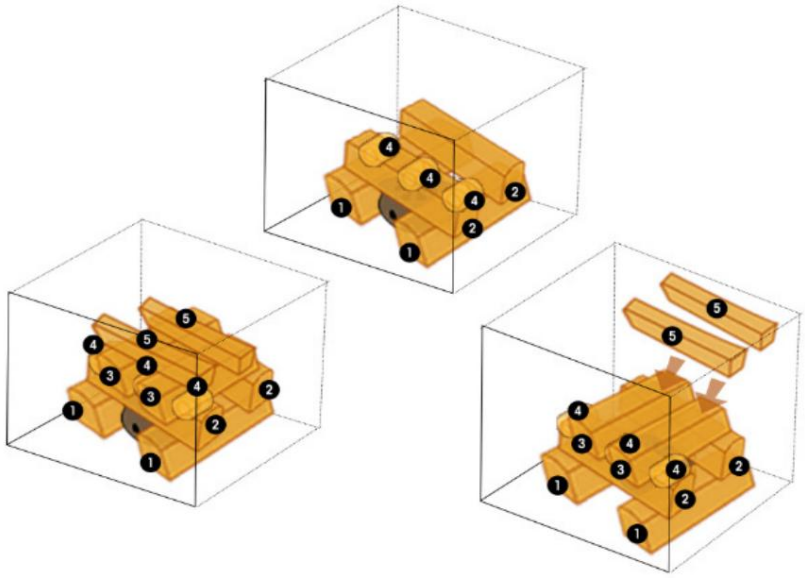

Phase 1: Place 2 large logs 15 cm lengthwise to the left and right of the grate.

Phase 2: Place 2 large logs 25 cm in the middle across the logs below.

Phase 3: Place 2 small logs 15 cm lengthwise over the logs laid in phase 2

Phase 4: Place 3 firelighters on the side and between the logs of phase 3

Phase 5: Place 2 small logs 25 cm across the top

Initial commissioning of control:

- **Insert batteries or connect power supply. The LED flashes red, green and yellow. The flap control performs a reference run.**

- **After completion of the reference run, the control moves to the heating position. The LED lights up green while driving.**

After lighting the fire, please close the door and turn the door handle down

Machine Translated by Google

From now on, the TwinFire Automatic will do everything for you. Here are the functions:

number	LED%Message	Event
1	Green, red and yellow 1 s each	Start the control after connecting the Supply voltage
2	20 s permanently yellow	Mounting position after reference run
3	Green while driving	Motor / flap moves
4	5 x yellow flashes for 1 s each, then 10 s pause repeat for 5 minutes	Request to add more wood during heating if the amount of wood used was too small.
5	5 x yellow flashes for 1 s each, then 10 s pause repeat for 5 minutes	Request to refill during a normal combustion

During the heating phase, the control remains in this position for about 20 to 30 minutes and the Fire burns upwards. After reaching the optimum operating temperature, the Control the upper smoke outlet and the flame burns downwards. During the When switching, the LED lights up green. This switching can be done several times at short intervals until the fire in both Combustion chambers are burning safely.

Please leave the door closed until the TwinFire is burning. After each door opening and - close the automatic process will start again from the beginning.

If automatic switching was not successful after several attempts, the The amount of wood placed on the log is too small. Please start with point 2 and place a larger amount Wood on.

Machine Translated by Google

The performance of the stove is controlled exclusively by the amount of wood placed on it. Please Only use an additional throttle valve in the smoke pipe if the chimney draught is too high.

The heating capacity of the stove is primarily determined by the amount of burnt wood.

If more wood is added, there is a risk of overheating the stove [especially if the wood is split into small pieces]. In addition, the air supply is not sufficient for a complete Combustion. The consequences are unnecessary emissions and fogging of the window. The measured The highest temperature is stored in the controller and can be read out in the event of a warranty claim become.

Refill

After the fuel is used up, the LED flashes yellow to signal that it is time to add more fuel.
The refill signal flashes for a few minutes.
Please add more fuel.
Please set the door handle to the "OPEN" position, as when lighting the fire, parallel to the door. First open the door about 1 cm for about 4 seconds, then open it completely so that the oven burns upwards again. Please open the door slowly to prevent a suction that the smoke can enter the room. Add more wood and continue as described under

Picture 3 describes the automatic switching. The xeoos starts the automatic switching automatically.

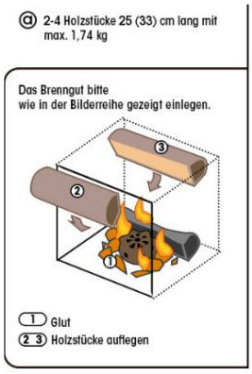

Refill

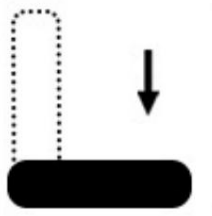

Close door

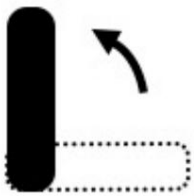

Open door

Machine Translated by Google

If no more fuel is added during this period and the combustion chamber cools down too much, the

If you want to let the xeoos go out, leave the oven in

this position.

If you want to plug the oven back in, start again from the beginning.

If the oven has not cooled down properly, there is a risk of burns.

Important!!

The combustion air openings in the upper combustion chamber at the rear (tertiary supply air) must not be blocked with firewood.

Machine Translated by Google

Status messages:

LED signals:

Error number	LED%Message	Event	Behave
1	Permanently red	battery empty; Battery voltage <= 4.0 V	The 2nd combustion chamber is closed.
2	Flashing red 2x every full minute	Battery almost empty Battery voltage <= 4.4 V	Normal program flow
3	Flashing red 3x every full minute as long as the door is open	Door is open and temperatures in the chambers are greater than 50°Celsius	The second combustion chamber is closed or remains closed.
6	Flashing red 6x once per engine ride	Timeout when motor travels to end position	Flap remains in position until the next event. The regulation continues as normal.
8	Flashing red 8x	Engine calibration not possible System error	The second combustion chamber is closed and the control switches to standby mode.

Flashing sequence: 300 milliseconds on; 300 milliseconds off

Technical data: Voltage = 6 VDC

Batteries 4 x AA or 5..6 V DC power supply with micro USB connection

Important: The nominal heat output of 8 kW is achieved with approx. 1.8 kg of wood or 1.7 kg

Never place more than one or two pieces at a time. Preferably place the wood crosswise. The combustion is optimal when the flames below glow light yellow to blue. If the Flames strike the side flues, the permissible heating output exceeded. The result is unnecessary emissions.

Warning: The outer surfaces of the xeoos especially get hot!

Danger of burns!

Machine Translated by Google

Operation in the transition period

During the transition period when the outside temperature is relatively high, the
As a result, the flue gases can be more difficult to escape. Please place
Add smaller pieces of wood until the chimney is thoroughly warmed.

Important: Only open the door for a short time.

Decommissioning

Let the fire die down and keep the oven closed until it cools down. If you
If you want to light the stove again after a long period of inactivity, you should make sure that
the exhaust gas path from the stove to the chimney outlet is clear. There must be no dirt, bird nests or similar.
clog the exhaust path.

Improper use

The xeoos® stove must not be fired with: waste, plastics, paint residues, paper, sawdust, pellets, oils, oil residues.

The xeoos® stove is not suitable for cooking food.

The xeoos® stove is not suitable for drying clothes on.

It must be ensured that the fresh or combustion air supply is not contaminated
and is not prevented or inhibited.

When operating the stove with room air, the opening under the stove must always remain free.

When operating with an external air connection, ensure that it is always free and that the
The slide valve on the supply air nozzle is open.

The oven must not be opened with tools or fire hooks.

The ash pan must be emptied when the ash reaches the upper limit of the ash pan.
Please note that the ash box must be cold before you remove it.

No changes may be made to the oven, otherwise the approval will expire
and the guarantee.

Machine Translated by Google

Only original spare parts may be used. These can be obtained from your dealer or from the manufacturer. Contact details can be found on the back cover.
Failure to comply will result in loss of approval and warranty.

Important: Overloads of the xeoos® stove that exceed the specified values of the triple value, will result in the warranty becoming void. Compliance with the values of the triple value is guaranteed by the Obtaining written approval of the fireplace from the responsible District master chimney sweep to ensure.

Machine Translated by Google

Cleaning and maintenance

Cleaning the xeoos® is rarely necessary. Efficient combustion and optimized
Air ducts ensure that you have little to worry about when it comes to cleaning and maintenance.
Only the ash box should be emptied regularly.

Empty ash box

To remove the ash:

ÿ Allow the stove to cool down

ÿ Open the firebox door

ÿ Pull out the ash box

Cleaning windows

Although the xeoos® design causes very little sooting of the
discs, it can still be damaged after prolonged use or improper
It may be necessary to clean the windows after firing. Use
Never use abrasive cleaners, harsh detergents or acidic cleaning agents, as
These can attack the Robax glass ceramic panel and cause it to go blind.
Use of such means will void the warranty for the Robax
Glass ceramic panel.

Tip: A damp cloth with ash cleans sooty windows excellently.

Alternatively, you can purchase special glass ceramic window cleaners from specialist retailers.

Clean flue gas ducts, exhaust pipes

The basic cleaning, which is carried out every 2-3 years depending on the intensity of use
should only be carried out by an authorized dealer.
For this purpose, the insulation plates [vermiculite plates] must be removed. The
Cleaning the air supply openings in the upper combustion chamber and the flue gas openings
In the lower combustion chamber you can from time to time comfortably with a
Vacuum cleaner. IMPORTANT: Please also clean the slot in the raised floor
You can use the vermiculite stones in the upper and lower
Always remove the combustion chamber in this order: bottom, rear wall,
side walls.

Also clean the TwinFire grate by knocking off any slag residue.

Machine Translated by Google

Cleaning options or cleaning openings for the exhaust pipes (connectors) must be present.

Note: Be careful when removing the insulation panels – risk of breakage!

The chimney may be blocked after a longer period of inactivity. Please inform the chimney sweep. In the event of a chimney fire, Inform the fire department and the district chimney sweep, reduce the air supply, do not open the firebox door!

Attention: Do not attempt to delete files yourself with Water, this can lead to steam explosions in the chimney, whereby significant damage to the structure can occur.

Maintenance work

Door hinges and locks need occasional maintenance. If necessary, they can be relubricated with heat-resistant Teflon oil [specialist dealer].
This is especially true for the brass bearing of the door handle. The manufacturer offers Teflon oil for this purpose. To repair scratches in the paint, the Manufacturer spray cans. The xeoos should be regularly cleaned by a specialist company/specialist.

Cleaning the catalyst (only for the Blue/E-Fire variant)

The catalyst is located in the lower combustion chamber behind the rear vermiculite plates.
To clean it, the vermiculite plates must be removed from the lower combustion chamber
This should be done once before each heating season and once in the middle of the heating season.
Caution: Only clean when the oven is cold! Risk of burns!
This happens as follows:

Machine Translated by Google

Remove ash box



Vermiculite bottom remove soil



Only x8: Remove steel insert



Remove the vermiculite from the bottom and back. Pay attention to the retaining plate



If necessary: First remove the upper vermiculite at the bottom left and right, then the lower vermiculite at the bottom left and right.





Machine Translated by Google

The catalyst (1) with the catalyst holder (2) is now visible and can be removed.

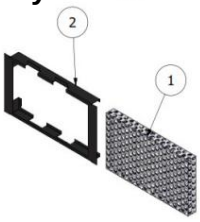

Carefully remove the catalytic converter from the holder and vacuum the catalytic converter with a standard ash vacuum cleaner. The catalytic converter can also be knocked out.

To insert, please proceed in reverse order.

IMPORTANT!!

The maintenance intervals for the downstream separation technology (Oekosolve and Exodraft) please refer to the respective operating instructions.

From 2024, the Blue Angel will only be valid in conjunction with the downstream Separation technology.

Machine Translated by Google

Malfunctions: causes and their solutions

The stove does not draw

The chimney draught is solely a result of the temperature difference between the Flue gases in the chimney and the surrounding area. The usable draft on the stove is also determined by the pressure losses on the path of the combustion air to the chimney outlet.

Temperature difference too small

ÿ Wood is too wet ÿ use dry wood.

ÿ Heating capacity is permanently too low or thermal losses of the chimney are too high for Low heating output with high efficiency ÿ check chimney dimensions and if necessary do not throttle the stove or renovate the chimney.

Pressure losses too high

ÿ Volume flow in the chimney too high ÿ check chimney for leaks, open doors, flaps and dampers of others, to the same chimney connected fireplaces, close them tightly or consult a chimney sweep.

ÿ Pressure loss in the chimney too high ÿ check chimney dimensioning [Chimney sweep]

ÿ Pressure loss in the furnace too high [fire grate blocked or filled] ÿ grate with Shake the fire hook and expose the passages

ÿ Flue gas ducts blocked ÿ fuel burns out in heating mode at minimum power and clean as described in the maintenance instructions after cooling of the oven.

Air supply disrupted ÿ Ensure room air supply, check existing supply air line if necessary.

The stove heats too weakly

ÿ Chimney draft too weak, see “The stove does not draw”.

Machine Translated by Google

The windows are sooty

ÿ Insufficient chimney draught ÿ see “The stove does not draw”.

ÿ Too much wood put on ÿ let it burn at medium heat output,

Only add more fuel when the “Add fuel” message is displayed.

ÿ Wood that is too damp, too old or rotten ÿ use better wood.

Wood consumption is too high

ÿ The wood is split too small

ÿ The chimney draught is too high ÿ Install draught limiter or throttle valve ÿ Measure

by district chimney sweep

Smoke comes out of the oven

ÿ Insufficient chimney draught ÿ see “The stove does not draw”.

ÿ Primary air openings in the upper combustion chamber [holes in the rear wall] blocked ÿ

Burning off the fuel and cleaning with a vacuum cleaner after the stove has cooled down

[remove the rear vermiculite plate if necessary]. ÿ Please also vacuum the

Raised floor collects ash.

ÿ Too much ash in the upper combustion chamber or central grate is blocked or clogged ÿ With

Shake the fire hook freely.

“Cracking noises”

This effect is common in fireplace stoves. It is caused by the expansion or contraction

of the metal parts. The tensions between the metal parts that arise during heating and cooling

Differently warm oven parts balance each other out.

Xeoos original spare parts

- Vermiculite combustion chamber above 5 kW | 8 KW
- Vermiculite combustion chamber below 5 kW | 8 kW
- ZSB handle x5n light | dark
- ZSB handle x5c
- ZSB handle x5p
- Standing grate glass
- Sealing cord diameter 11 spring loaded

Machine Translated by Google

- High temperature adhesive for sealing
- TF-Rust
- Teflon – lubricating oil
- Paint spray can 100ml anthracite | silver | cast grey |
- Stone lid | with hole | without hole

  - Lava, Ming Yellow
- Conversion kit for top outlet ÿ rear outlet
- Conversion kit for rear outlet ÿ top outlet

The vermiculite can be replaced without tools. Everything else can be replaced with normal commercially available Tools. Light repair work can be carried out without any problems

If you have any questions, please contact your dealer or us directly. Please feel free to request our service and assembly instructions. These are also available at www.xeoos.de.

For further spare parts please request our spare parts catalogue or visit www.xeoos.de. We guarantee the supply of spare parts for our xeoos as well as the separators from at least 10 years.

Permit

Approved according to EN 13240 version 2005-10 and amendment 2008-06 as well as DIN EN 16510.

Fire protection regulations

The respective national fire protection regulations must be observed and complied with.

xeoos® warranty conditions

Dear Customer,

You have chosen the two fire fascination of xeoos® and thus a product which is processed under the highest quality standards. That is why we guarantee all Stoves come with a guarantee of 8 years from the date of delivery.

The guarantee applies to the body

ÿ faultless function and flawless material

ÿ a flawless design.

Machine Translated by Google

If a quality problem occurs with the xeoos® , please contact your xeoos® specialist or regional dealer who is the contracting party for the warranty service. This will Check your warranty claim immediately with xeoos. The warranty period begins when the invoice is sent to the end customer. This only applies to xeoos® stoves that have not been used up to that p

Warranty requirements

Your warranty claim cannot be recognized and is void if

ÿ the xeoos® was not used in accordance with the associated operating instructions

ÿ Component-related changes were made to the xeoos

ÿ Damage caused by incorrect or improper installation or maintenance

ÿ Installation or repairs were carried out by third parties

ÿ Damage caused by normal wear and tear [e.g. seals, glass ceramics (Robax-pane and standing grate glass), vermiculite plates (cracks), refractory concrete, TwinFire grate and ash box]. ÿThese components are excluded from the guarantee and warranty excluded.

ÿ Damage caused by the use of fuel not listed in the operating instructions arise.

ÿ No liability for consequential damages, in case of intent, gross negligence, injury material contractual obligations by manufacturer and supplier, injury to body and Life.

ÿ The Severability Clause applies to these warranty conditions and we refer to our terms and conditions.

National and local regulations must be met

Approved for use on multiple chimneys, depending on room air.

Approved for use on single-layered chimneys, independent of room air.

National and European standards as well as local regulations must be observed.

Optical and technical changes reserved

Machine Translated by Google

Technical data of the fireplace, summary

Room heaters DIN EN 13240

Series:	**xeoos x8**
Series in conjunction with AVLE E-Fire:	**xeoos x8…E-Fire/xeoos x8…Blue x8**
Types:	**BASIC…/x8 BASIC ECO GREEN…/x8 PUR…/ x8 NATUR…/ x8 PATAGONIA…(E-Fire/Blue)**
Versions:	**Various steel/stone variants, rotating or non-rotating construction, cladding frame on the wooden compartment**

Description	xeoos x8…E%Fire/xeoos x8…Blue
Examination according to	EN 13240:2001/A2:2004/AC:2007
fuel	Firewood DIN EN ISO 17225-5:2021-11, Wood briquettes DIN EN ISO 17225-3:2021-06
Rated power	8KW
Room performance	8KW
mass	BASIC: 235 kg BASIC with stone cladding: 290 kg BASIC ECO GREEN: 202 kg BASIC ECO GREEN Stainless steel: 236 kg BASIC ECO GREEN Stone: 301 kg PURE: 233 kg NATURE: 235 kg NATUR with stone cladding: 290 kg PATAGONIA Steel:201 kg PATAGONIA Inox: 235 kg PATAGONIA Stone: 300 kg
Discharge pressure at rated power	12 Pa
Exhaust gas temperature in the exhaust pipe	270°C
Exhaust gas mass flow	7.44 g/s
CO at 13% O2	247.9 mg/m³
Dust at 13% O2	4.3 mg/m³
NOx at 13% O2	118.3 mg/m³
Efficiency	83%

Machine Translated by Google

Recycling strategy

The xeoos consists of the following materials:

1. **Steel, cast steel**
2. **Vermiculite**
3. **Glass**
4. **Wood**
5. **Stones**
6. **Electrical components**
7. **Combination with separator from 2024**

Disposal:

You can obtain assembly/disassembly instructions from us or directly at www.xeoos.de.

Steel, cast steel:

All metals can be separated and used in their pure form. The metals are raw materials and can be returned to a recycling company for further use or via the Scrap metal can be disposed of at a collection point. Please contact your local authority.

Vermiculites:

Vermiculite is the mineralogical name for hydrated, laminar magnesium-aluminium Iron silicates, which resemble mica in appearance. If raw vermiculite is exposed to heat It has the unusual property of expanding into worm-like particles. It is bound by inorganic binders.

Vermiculite is characterized by its environmental friendliness. It is good for people and nature completely harmless.

Accordingly, the disposal of vermiculite is very unproblematic. Disposal can be disposed of as mineral waste with the waste code EAK No.: 170107.

No special treatment is required beforehand as long as there is no contamination with foreign substances, which have their own waste code.

Of course, it is always important to ensure that disposal is carried out in accordance with national and regional regulations.

Machine Translated by Google

Glass:

The glass is to be recycled.

Wood:

Wooden handles made of natural wood can be disposed of in organic waste.

Stones:

Small quantities of stones should be disposed of at the recycling center. Please inquire at their city administration.

Electrical components:

Dispose of electronics at a collection point for electronic waste. Inquire at your local council.

Separator

The xeoos Blue variant will be equipped with separators from Exodraft systems GmbH (www.exodraft-systems.de) and/or OekoSolve AG (www.oekosolve.com) in 2024 and approved. The operating and installation instructions for the separators are included with the furnace and can be viewed on the Internet on the manufacturer's website (see above).
The recycling strategy of the company and the separator can be found from the manufacturer.

Machine Translated by Google

Machine Translated by Google

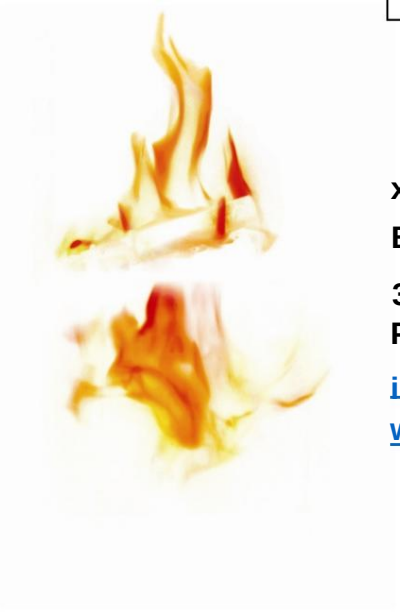

xeoos GmbH

Bahnhofstrasse 2

35116 Hatzfeld-Reddighausen
Phone +49 6452 92988-0

info@xeoos.de
www.xeoos.de